Power Disturbances:

In the past electrical loads were linear. The current was proportional to the voltage, though lagging by some time depending on the power factor. Today, loads that are switched or pulsed, such as scr drives and switching power supplies are nonlinear. Nonlinear load currents vary widely from a sinusoidal wave shape and they are extremely high in harmonic content.

Sensitive electronic equipment, especially computers, require a source of steady, constant-voltage (constant-frequency power) with no transients superimposed. But such clean power is not consistently available on a drilling rig. The utility power there is usually degraded by disturbances, mainly commutating spikes and notches (…see picture below) from the scr drives. Power that is satisfactory for heating, lighting and motors, can cause in electronic devices a lot of problems and failures. These failures can be extremely costly, and correction can be very time consuming.

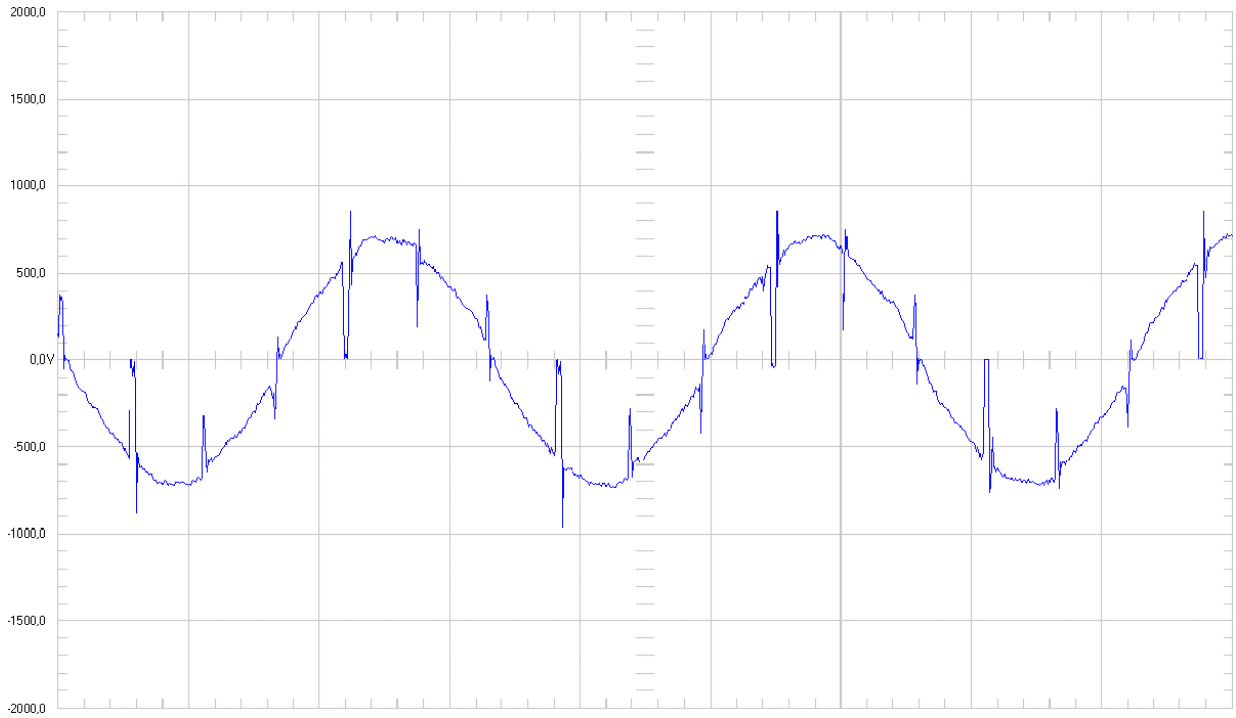

The most common power disturbances are the transient, a sudden, rapid rise or dip in voltage, as single spikes or oscillation. Oscillatory transients may have frequencies of several kilo- or megahertz, lasting up to a full cycle. Transients can reach a peak several times the system voltage.
Also common are under voltages, frequency deviations and complete power outages or blackouts.

Wiring Practices and Grounding:

When planning a system wiring, separate wiring into functionally similar groups. E.g. power cables, sensor leads, signal cables etc. If the power cables and sensor- or signal leads must cross, they should cross at a 90° angle to each other.
Locate all sources of electrical noise in the system, and separate these sources from the control system. As it is mentioned already on the previous page, electrical noise can affect the function of any control system. When driving a contactor coil or other inductive load, an appropriately rated protection device is recommended.

Sensor leads should not be run together in the same conduit as power cables. Shielded wire is recommended for sensor connections. Ensure that no current can flow through the shield of these wires. The shield must be grounded at one end only, preferably at a shield terminal on the controller. If it is necessary to connect the sensor to ground potential, an extra conductor in the sensor cable is required (…see picture below).

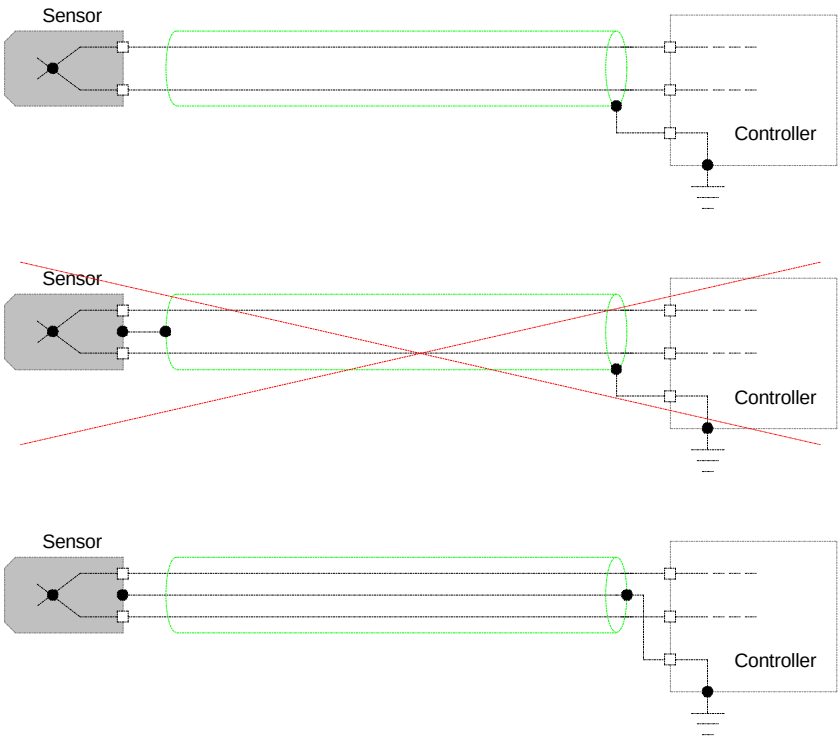

Because electronic equipment is so sensitive to electrical noise input, good grounding is very important. The grounding from an electronic system should not be separated from the power grounding system. All groundings should be on the same level (potential), a difference in grounding potentials may introduce electrical noise into the electronic equipment, rather than keep it out. That means a system must be complete bonded to the power system grounding electrode.

Back - EMF:

If the current in a conductor varies, the resulting changing magnetic field cuts across the conductor itself and induces a voltage in it. This self-induced voltage is opposite to the applied voltage. If the conductor is a wire wound into a coil, the effect is much increased because the fields from the individual turns of the coil cut the neighboring turns and induce a current in them as well. The result is that such a coil, when connected to a voltage, will impede the flow of current when the voltage is first applied. When the voltage is removed from a coil, the magnetic field in the coil collapses, and the moving lines of force cut the turns of the coil. The current induced under these circumstances in the high-ohm circuit, could result in a high voltage-peak.
E.g. this effect destroys semiconductors which are connected in the same circuit as a coil.

Precautions:

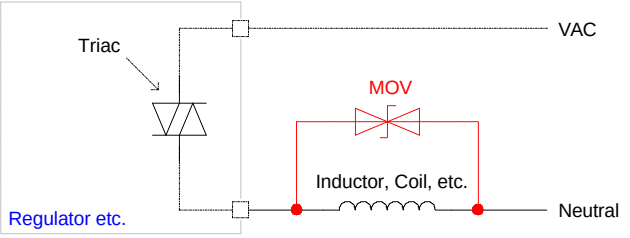

AC Circuits

If the coil induced high voltage spikes, the MOV impedance changes from a high standby value to a low conducting value, thus clamping the voltage peaks to a protective level. The excess energy of the incoming high voltage pulse is absorbed by the MOV.

…this method works also at DC circuits.

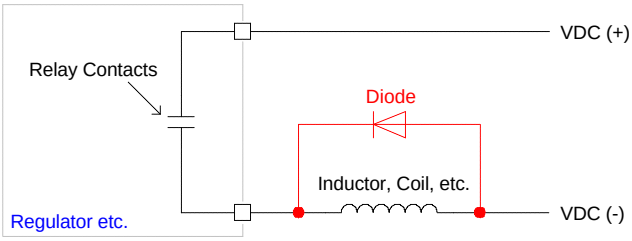

DC Circuits

In DC Circuits it is common to use a simple diode such as 1N4007 as a Back-EMF protection. The diode has to be connected (backwards) parallel to the relay- or solenoid coil.

…these diodes also known as “Back-EMF-Diode”

(At large contactor coils a resistor in series to the back-emf-diode limits the raise of current.)

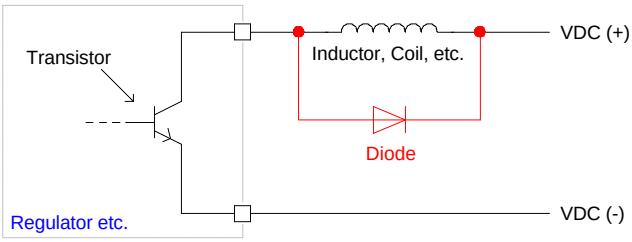

Metal Oxide Varistor (MOV):

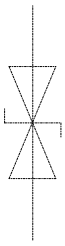

Metal oxide varistors are for suppressing AC mains borne transients, spikes, etc.; they may also be used on DC voltage systems. Metal oxide varistors are non-linear voltage dependant resistors. At normal system voltage they are high in resistance value and only milliamps flows through them. A high voltage will reduce the varistor resistance value and the transient voltage energy will absorbed by the MOV.

High energy (power) MOV's are suitable for reducing transient voltage spikes in industrial power applications. They provide repeatable protection against high energy transient voltages.

Technical Specification (MOV):

1.

RMS	DC	Vc	J
60	85	210	6
130	170	425	14
130	170	385	30
130	170	360	53
275	350	850	8.5
275	350	850	26
275	350	815	61
460	615	1490	16

RMS …max. cont. voltage
DC …max. cont. voltage
Vc …max. clamping voltage
J …energy transient

…high energy types

2.

RMS	DC	Vc	J
242	330	620	160
275	370	680	180
420	560	1050	260
460	615	1140	290
484	640	1200	320
242	330	645	160
275	370	680	180
352	470	1005	260
460	615	1230	290
484	640	1300	320
132	175	360	200
242	330	675	340
275	365	750	360
460	605	1210	500

…this is only a small selection as an example of the most common types

Varistor Safety Precautions:

Should the MOV be subjected to surge currents an energy levels in excess of maximum ratings it may physically fail by package rupture or expulsion of material. If not fused the varistor should be located away from other components or be physically shielded from them.

SCR Protection 1:

Reactors between the power supply and the scr bridge or ferrites on each arm of the scr bridge provides some reactance in series with the scr devices to limit the rate of rise of current dI/dt flowing into each scr. They also reduce the harmonic components of the current.

Snubber circuits (RC circuit) connected across each scr protects the scr device from rapidly rising voltages dV/dt.

dI/dt = fast rising current

dV/dt = fast rising voltage

Excessive dI/dt or dV/dt can cause the scr to misfire and burn out.

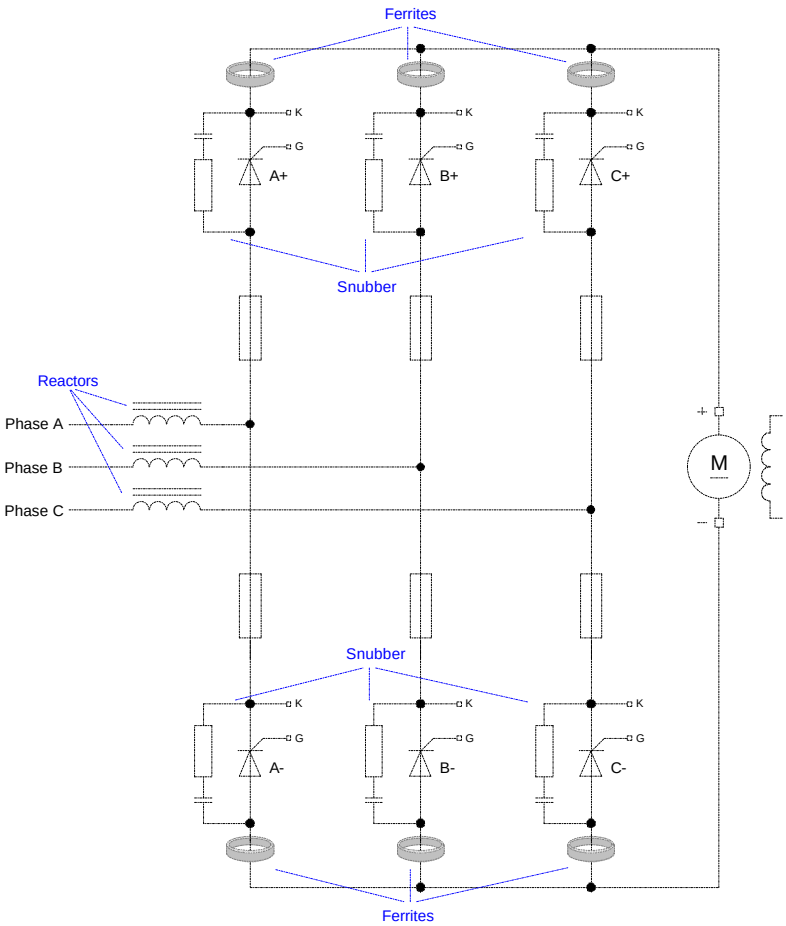

Surge Suppression:

A surge suppression is designed to eliminate transient voltage spikes on the AC bus that could cause damage to the scr bridge. There are ussually three metal oxide varistors (MOV) connected in delta to the main bus, via a fused switch.

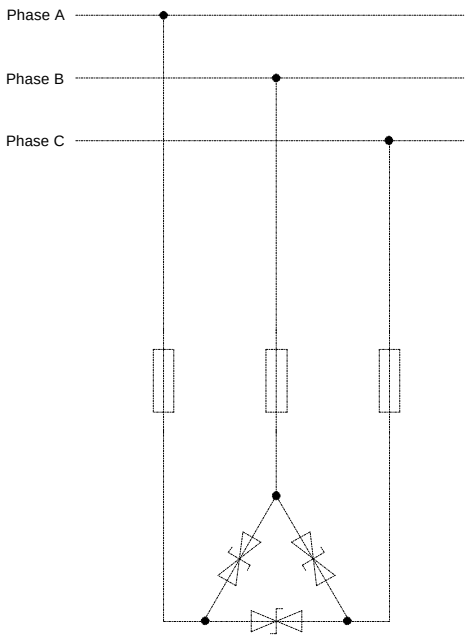

Transient voltage surge suppressors:

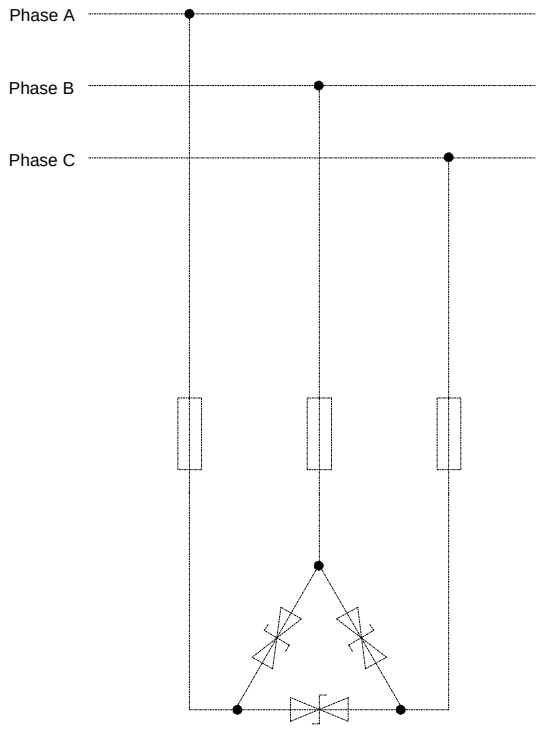

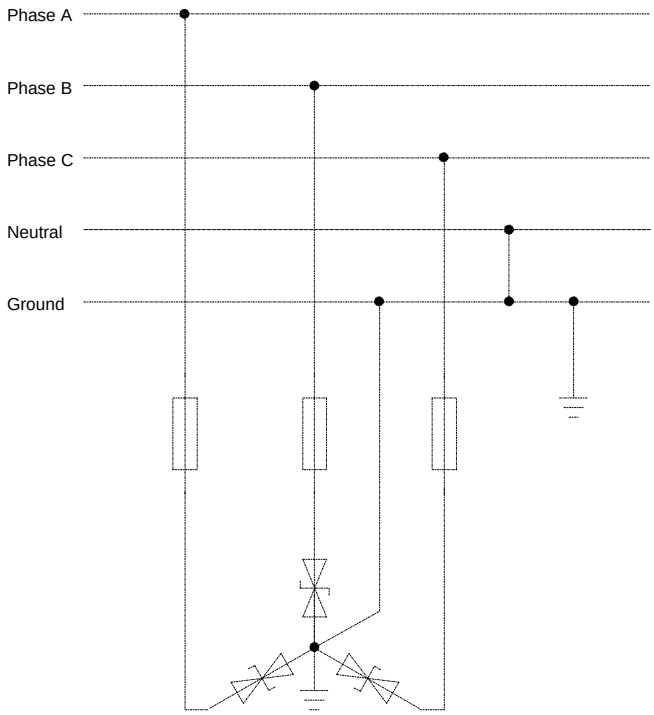

- Left : …for three phase delta system configuration.

- Right : …for three phase wye (star) system configuration.
  Neutral must solidly bonded to ground at service entrance or supply transformer!

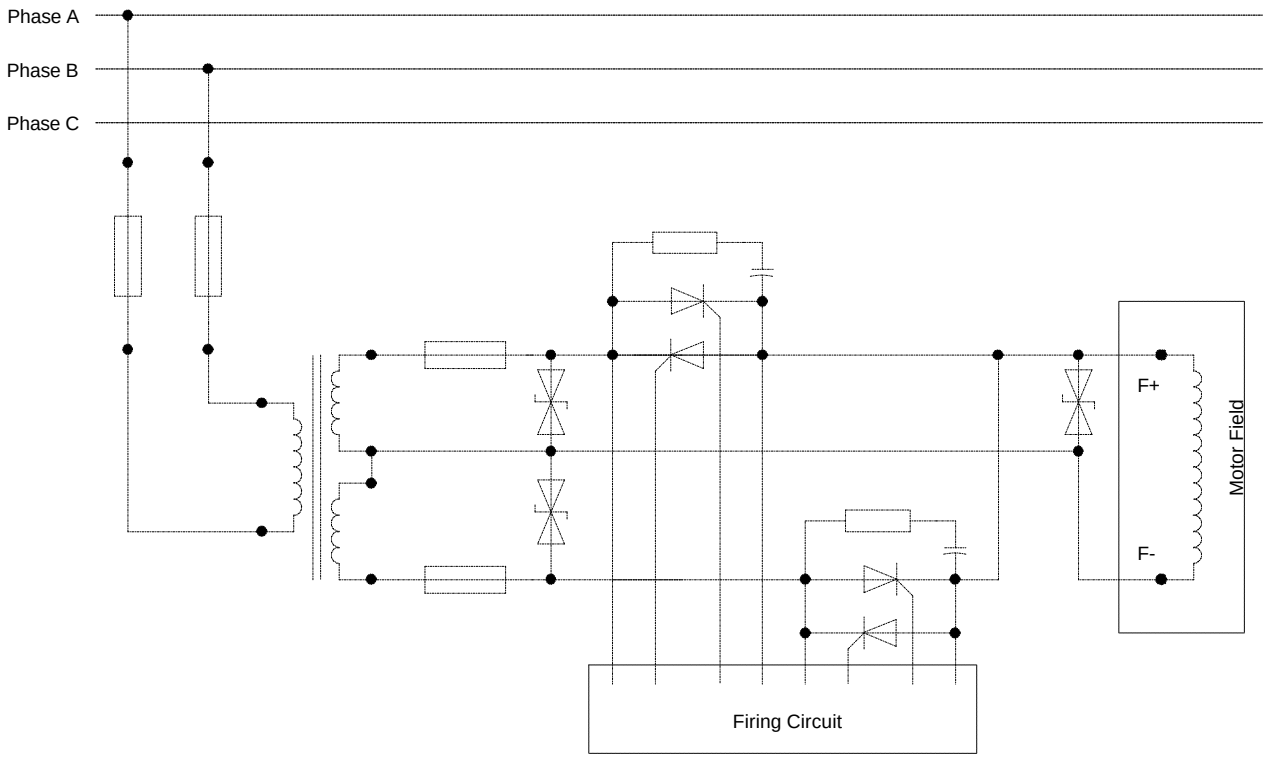

Example: **Reversing Field Supply:** Two MOV's across the supply transformer secondary as surge suppression, and one MOV across the scr output as back-emf-protection.

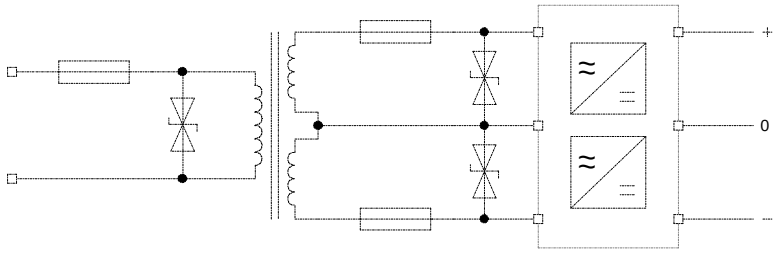

Example: **Power Supply:** Electronic equipment in general; MOV across the supply transformer primary- and secondary as surge suppression.

Power Conditioning:

Line Voltage Conditioner (LVC), used to protect sensitive electronic equipment from mains borne noise and voltage transients. The LVC provides a stable filtered mains output, it should fitted between the mains supply and the equipment which requires a protection. A isolation transformer and filter network provide noise attenuation used to reduce the harmful high voltage transient and noise surges frequently. To maintain a controlled stable mains supply, a regular circuit with a response time of usually 1½ cycles, ensures the output voltage does not vary more than +/-6 %, even with input voltage variations as +/-15 %.
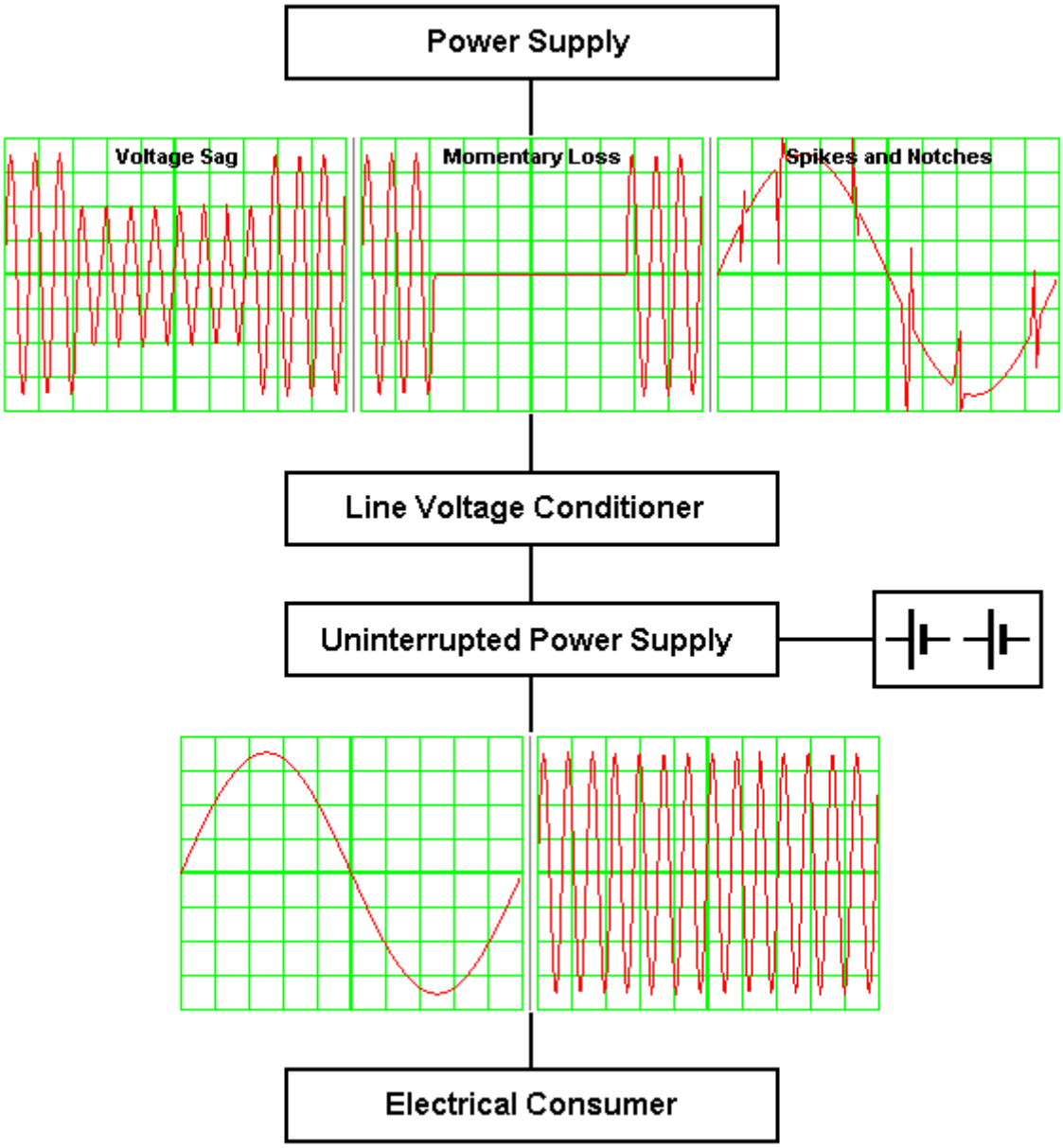
Uninterrupted Power Supply (UPS), convert incoming AC power to filtered DC power, then resynthesizes it back to perfect sine-wave, frequency-controlled 120/240VAC power. Isolate critical equipment from common power problems. Constant on-line operation eliminates crashes due to transfer time to battery. On-line voltage regulation keeps equipment working through voltage fluctuations.