EQUIPOTENTIAL GROUND BONDING

To avoid dangerous potential differences between equipment and surroundings, it is mandatory to ensure that equipment has metallic connections to ground (bonding), in addition to grounding through the feeder cable.

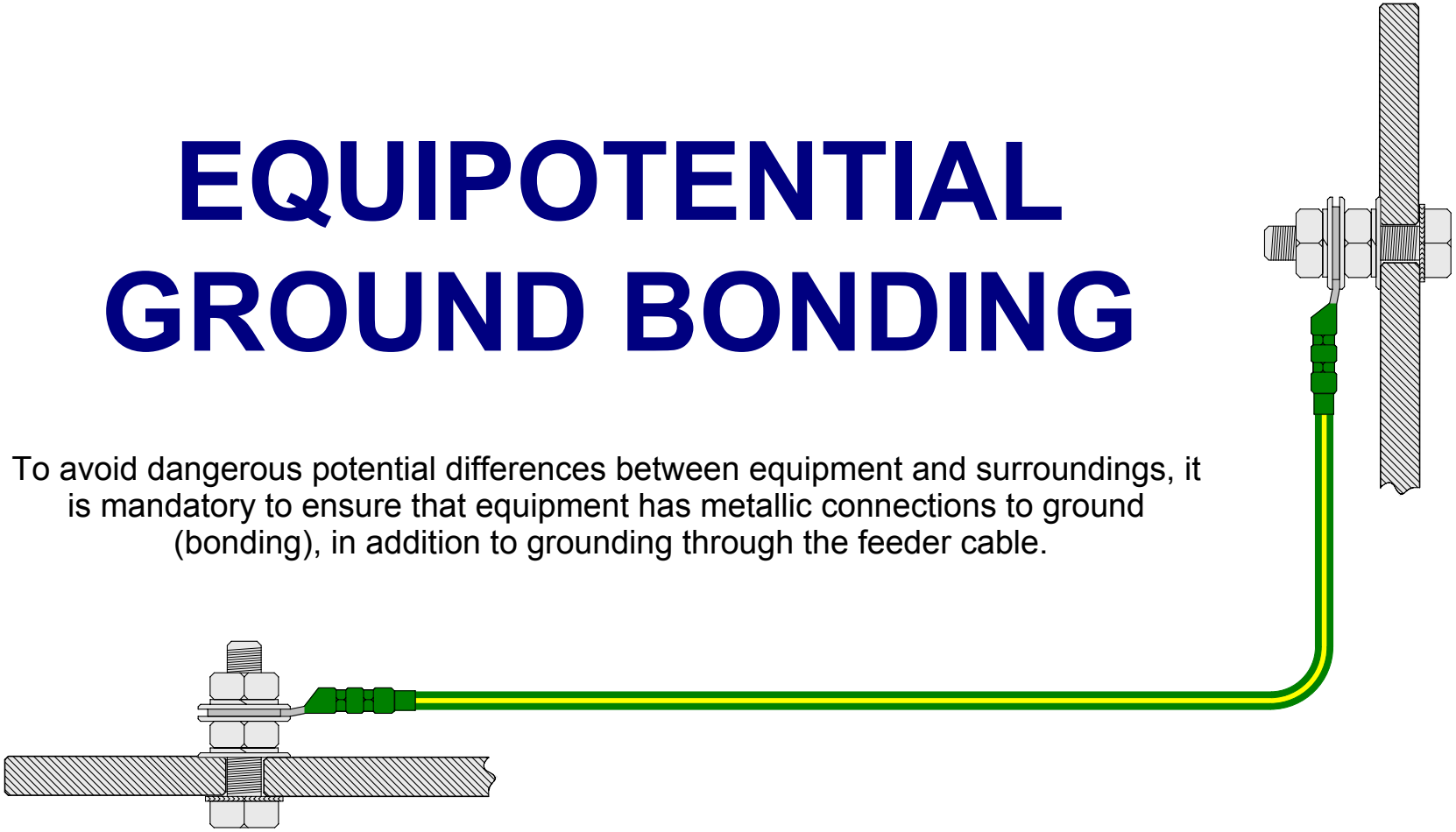

REV	YYYY-MM-DD	ECN	DESCRIPTION	DRWN	CHCK	APPR
A	2015-09-19			UE		

TITLE			
PROJECT	Equipotential Ground Bonding		
SCALE	DRAWING NO. ue-20150919-01	SIZE	SHEET 01	REV. A

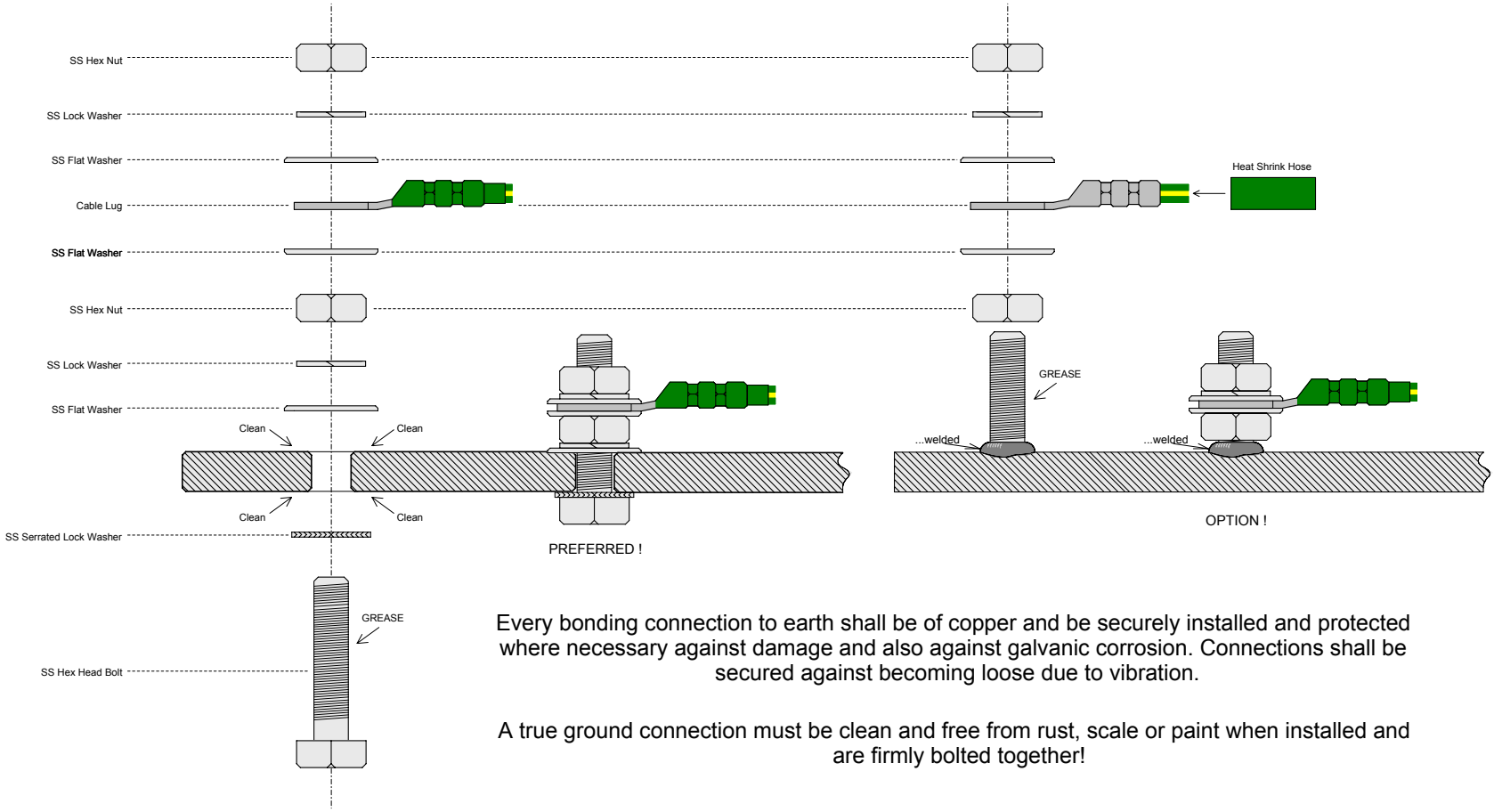

Every bonding connection to earth shall be of copper and be securely installed and protected where necessary against damage and also against galvanic corrosion. Connections shall be secured against becoming loose due to vibration.

A true ground connection must be clean and free from rust, scale or paint when installed and are firmly bolted together!

REV	YYYY-MM-DD	ECN	DESCRIPTION	DRWN	CHCK	APPR
A	2015-09-19			UE		

TITLE: Equipotential Ground Bonding

PROJECT:

SCALE	DRAWING NO.	SIZE	SHEET	REV.
	ue-20150919-01		02	A

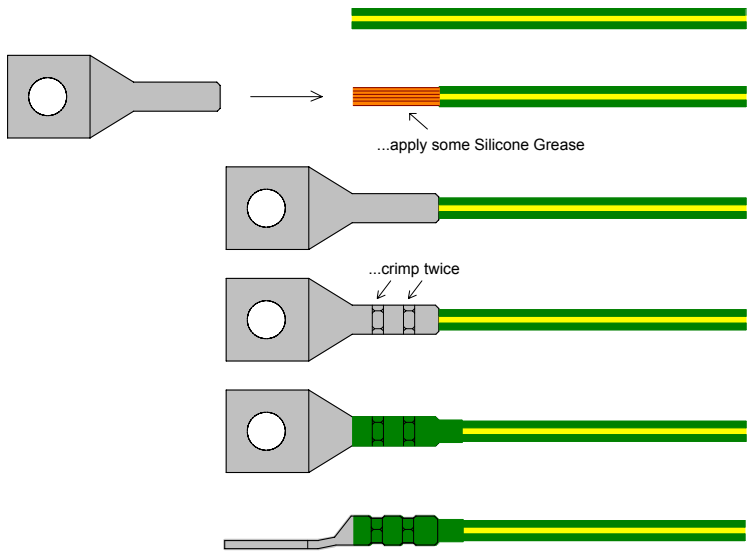

All equipment bonding connections shall be made with suitable compression cable lugs.

Heat Shrink Hose

Minimum cross section for groundings shall be copper wire #10 AWG due to mechanical strength, for switches, receptacles, junction boxes, etc.

Distribution panels, load center, instrument panels, etc. and motors up to 75hp shall be grounded with #2 AWG ground cable.

Motors 100hp and up requires AWG #4/0 AWG, traction motors and rig generators two separate #4/0 AWG cable for grounding.

...only one connection per bolt !

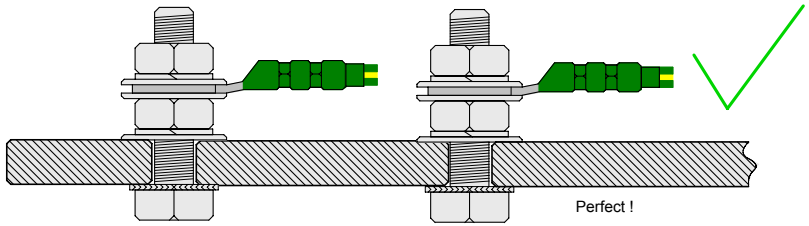

Perfect !

...better than nothing, but only a tempoary solution !

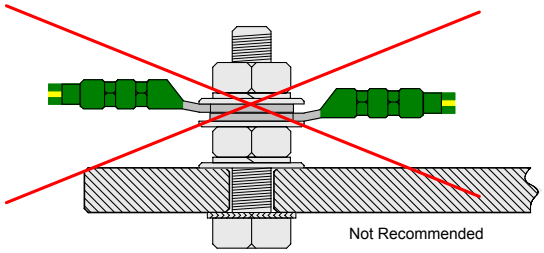

Not Recommended

REV	YYYY-MM-DD	ECN	DESCRIPTION	DRWN	CHCK	APPR
A	2015-09-19			UE		

TITLE: Equipotential Ground Bonding

PROJECT:

SCALE	DRAWING NO.	SIZE	SHEET	REV.
	ue-20150919-01		03	A

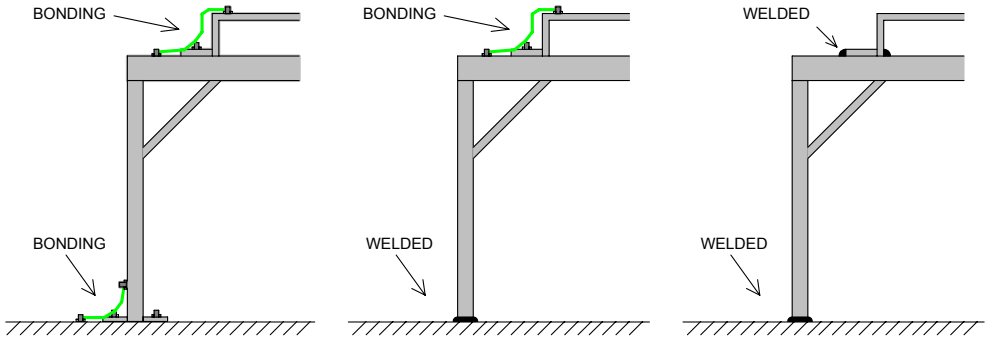

All metallic components of the structure which is not welded to the main structure need to be equipotential bonded.

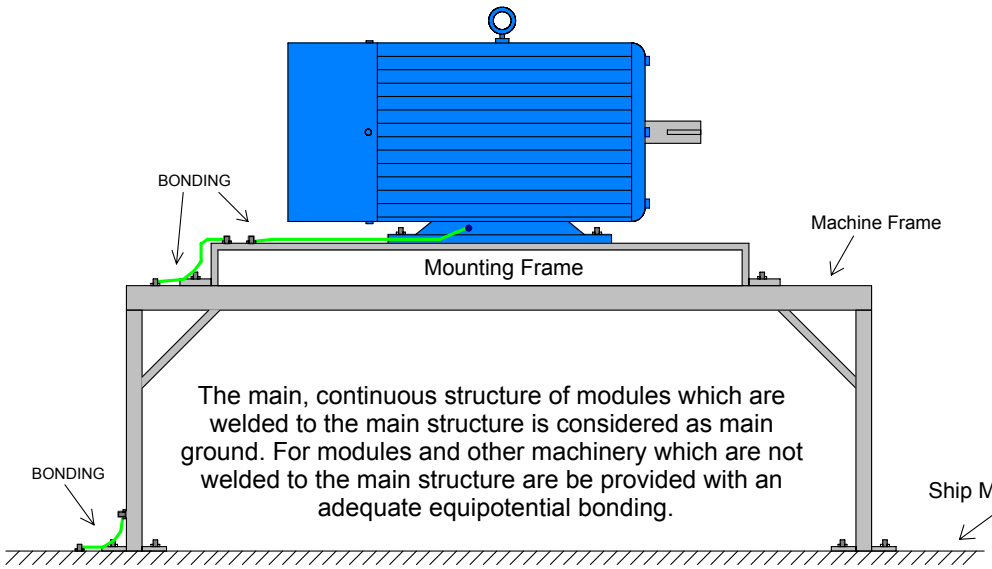

The main, continuous structure of modules which are welded to the main structure is considered as main ground. For modules and other machinery which are not welded to the main structure are be provided with an adequate equipotential bonding.

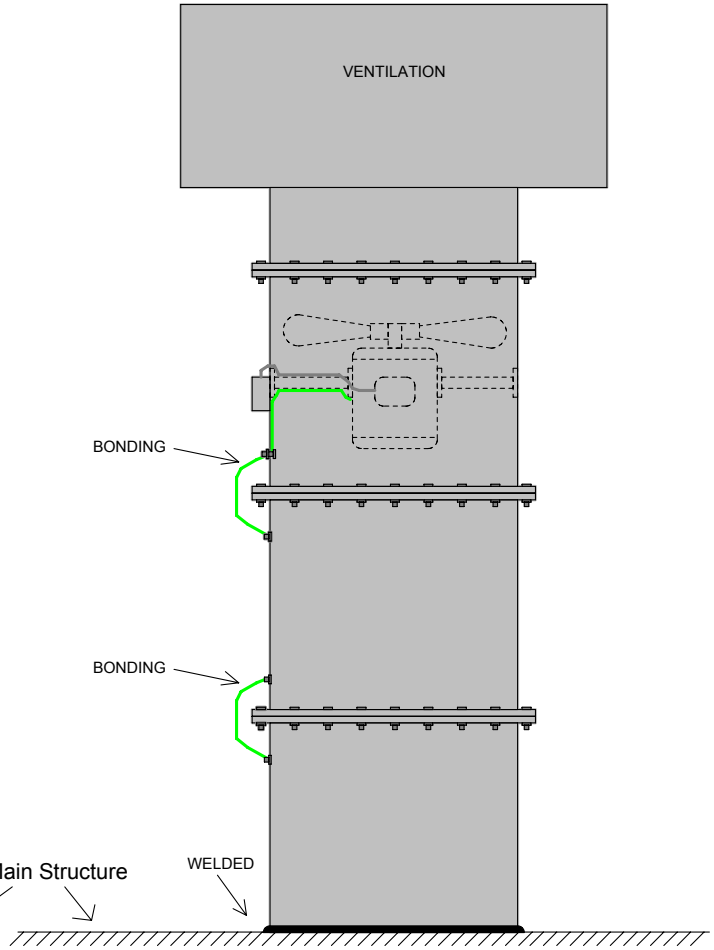

REV	YYYY-MM-DD	ECN	DESCRIPTION	DRWN	CHCK	APPR
A	2015-09-19			UE		

TITLE: Equipotential Ground Bonding

PROJECT:

SCALE	DRAWING NO.	SIZE	SHEET	REV.
	ue-20150919-01		04	A

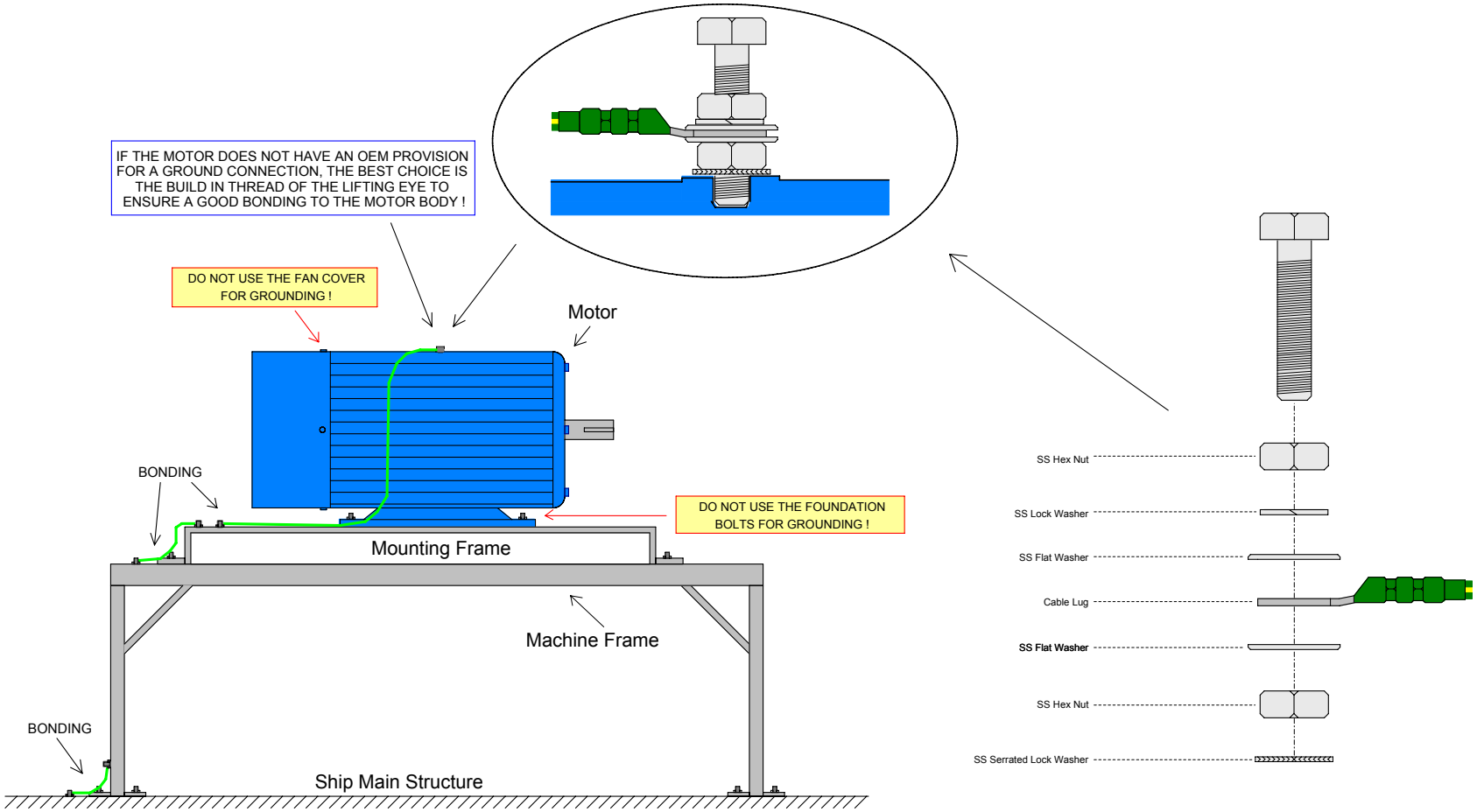

REV	YYYY-MM-DD	ECN	DESCRIPTION	DRWN	CHCK	APPR
A	2015-09-19			UE		

TITLE: Equipotential Ground Bonding

PROJECT:

SCALE	DRAWING NO.	SIZE	SHEET	REV.
	ue-20150919-01		05	A

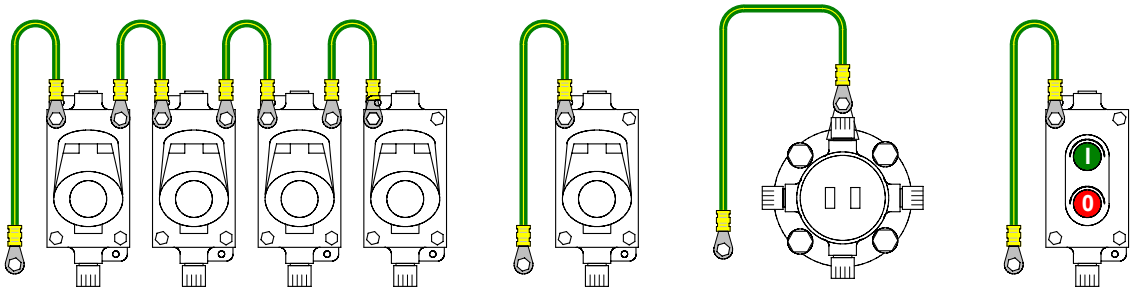

Exposed non-current carrying metal parts of any fixed equipment which may become energized shall be grounded to the main structure to maintain a low impedance path to ground. Where the enclosure is non-conductive, then the glands (if metal) should be bonded to the main structure.

REV	YYYY-MM-DD	ECN	DESCRIPTION	DRWN	CHCK	APPR
A	2015-09-19			UE		

TITLE: Equipotential Ground Bonding

PROJECT:

SCALE	DRAWING NO.	SIZE	SHEET	REV.
	ue-20150919-01		06	A